NKE-1130 Scanner footprint
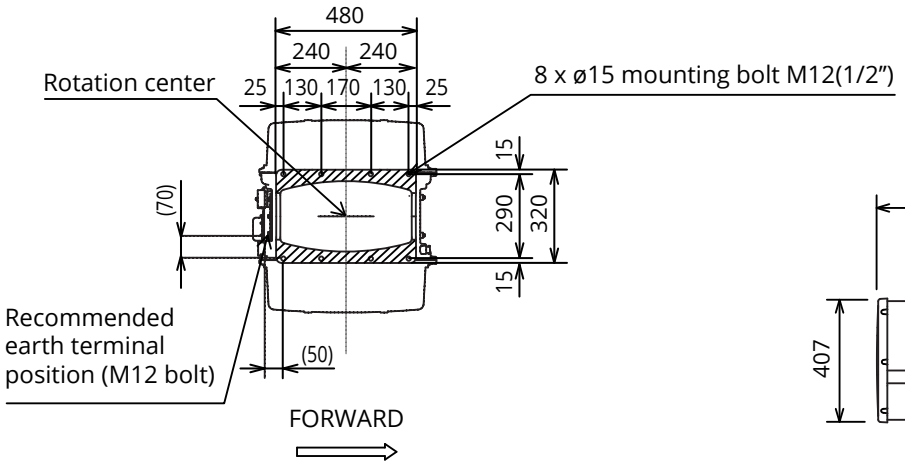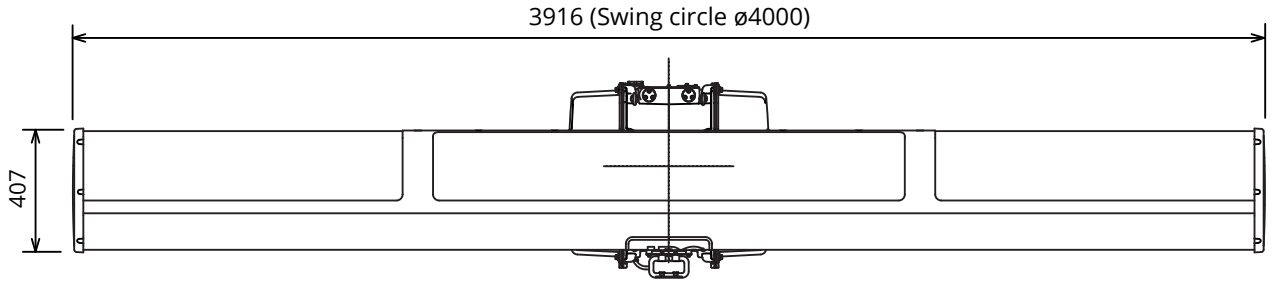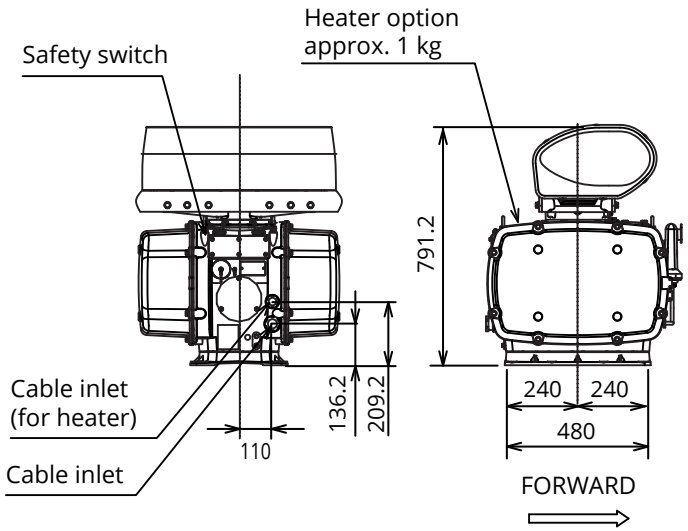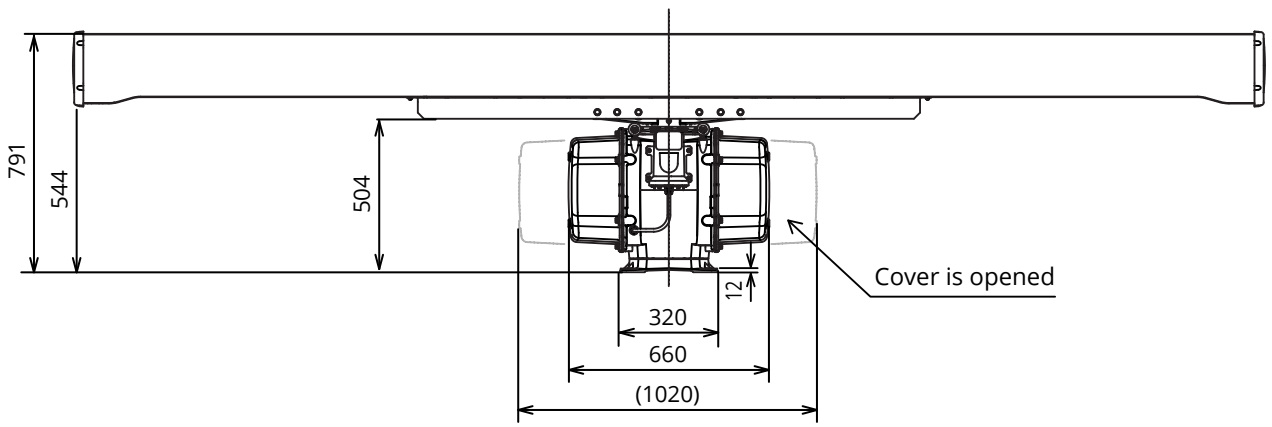
MOUNTING DIMENSIONS (TOP VIEW)